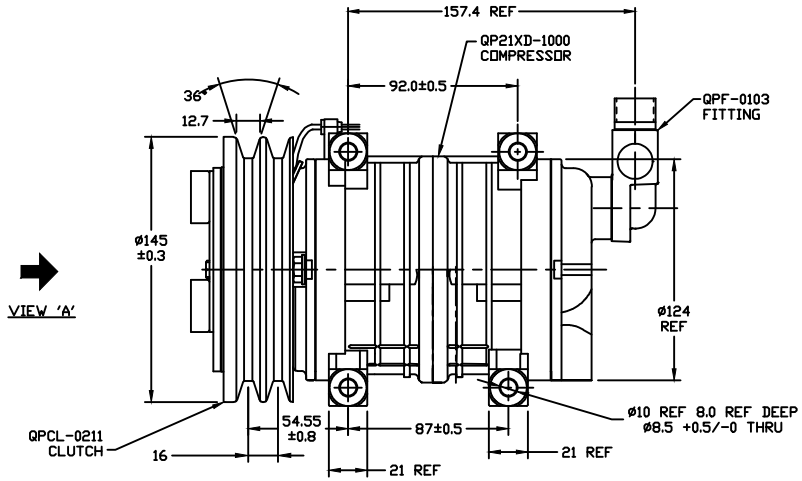

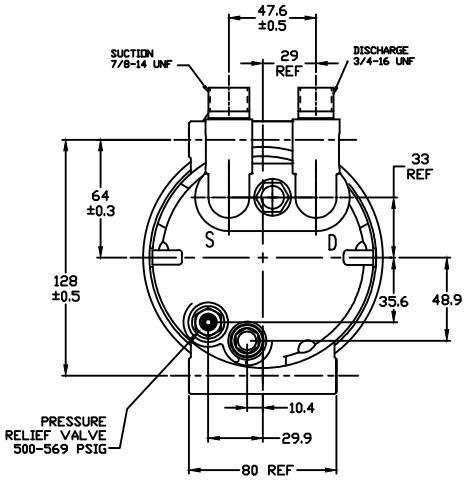

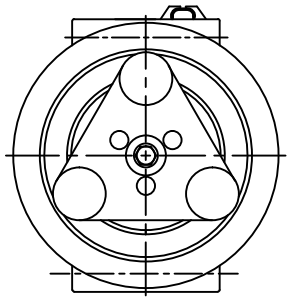

VIEW 'A'

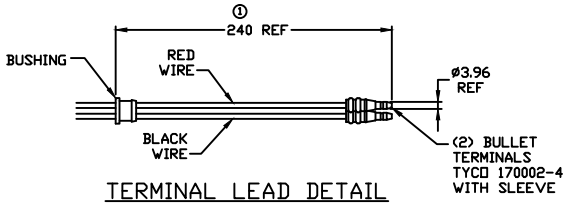

TERMINAL LEAD DETAIL

CLUTCH SPECIFICATIONS

1) VOLTAGE..... 12 VDC
2) BELT..... A2
3) STATIC TORQUE
   INITIAL..... 40 Nm
   AFTER BURNISHING..... 59 Nm
4) MAX POWER CONSUMPTION..... 45W @ 25°C
5) WEIGHT..... 3.1 Kg

COMPRESSOR SPECIFICATIONS

1) MODEL..... QP21
2) NUMBER OF CYLINDERS..... 10
3) BORE x STROKE..... ø32 x 26.7
4) DISPLACEMENT..... 214.7 cm3
5) SPEED RANGE..... 700-6000 RPM
6) ROTATION DIRECTION..... CW or CCW
7) REFRIGERANT..... R-134a or R-404a
8) LUBRICANT..... NO OIL -SHIP DRY-
9) WEIGHT..... 5.1 Kg

REVISIONS

CHG	EO#	DESCRIPTION	DATE	BY	CK
A	JC	PRE-RELEASED	08/21/12	GLB	
0	ENG	RELEASED	08/28/12		
1	PQ	240 REF WAS 250 REF FROM COIL	07/24/14	GLB	

NOTICE
QUE PRODUCTS, LLC CLAIMS PROPRIETARY RIGHTS IN THE MATERIAL DISCLOSED HEREON. THIS DRAWING IS ISSUED FOR ENGINEERING INFORMATION ONLY. IT MAY NOT BE REPRODUCED, NOR MAY THE INFORMATION HEREON BE USED FOR MFG. PURPOSES WITHOUT WRITTEN PERMISSION FROM QUE PRODUCTS, LLC

UNLESS OTHERWISE SPECIFIED:
X.XX=± X.XXX=± <=±
DRAFT= PER SIDE WALL= RADII=
DIMENSION LIMITS TO BE HELD AFTER PLATING OR CONVERSION COATING
DIMENSIONS PER ANSI Y14.5
SURFACE FINISH PER ANSI Y14.36

CUSTOMER NAME PART NO - REV

TCCI MANUFACTURING, L.L.C.
DECATUR, ILLINOIS USA

ALL CHANGES TO BE MADE ON CAD SYSTEM

DRAWN	DATE	EWR-ECR	CHECKED	DATE
GLB	08/21/2012			

MATERIAL AND HEAT TREAT | FINISH

TITLE
COMPRESSOR DIR A2 145mm 12V H-PAD

SIZE A | EXPERIMENTAL DWG NO | RELEASED DWG NO _ REV QP21XD-1846_1

SCALE: / = 1.00 | DO NOT SCALE DRAWING | SHEET 1 OF 1